КАТАЛОГ(МОРСКИЕ КРАНЫ)

ОООТЛК "СУДОКОМПЛЕКТ
ПОСТАВЩИК СУДОВОГО ОБОРУДОВАНИЯ

Website:www.mor-sk.ru
тел+7 920 030 05 75
тел. +7 920 010 00 68
тел.+7 920 060 30 80
E-mail:avponkin@yandex.ru
E-mail:tlk.sudokomlekt@yandex.ru

8T15M Telescopic Boom Crane

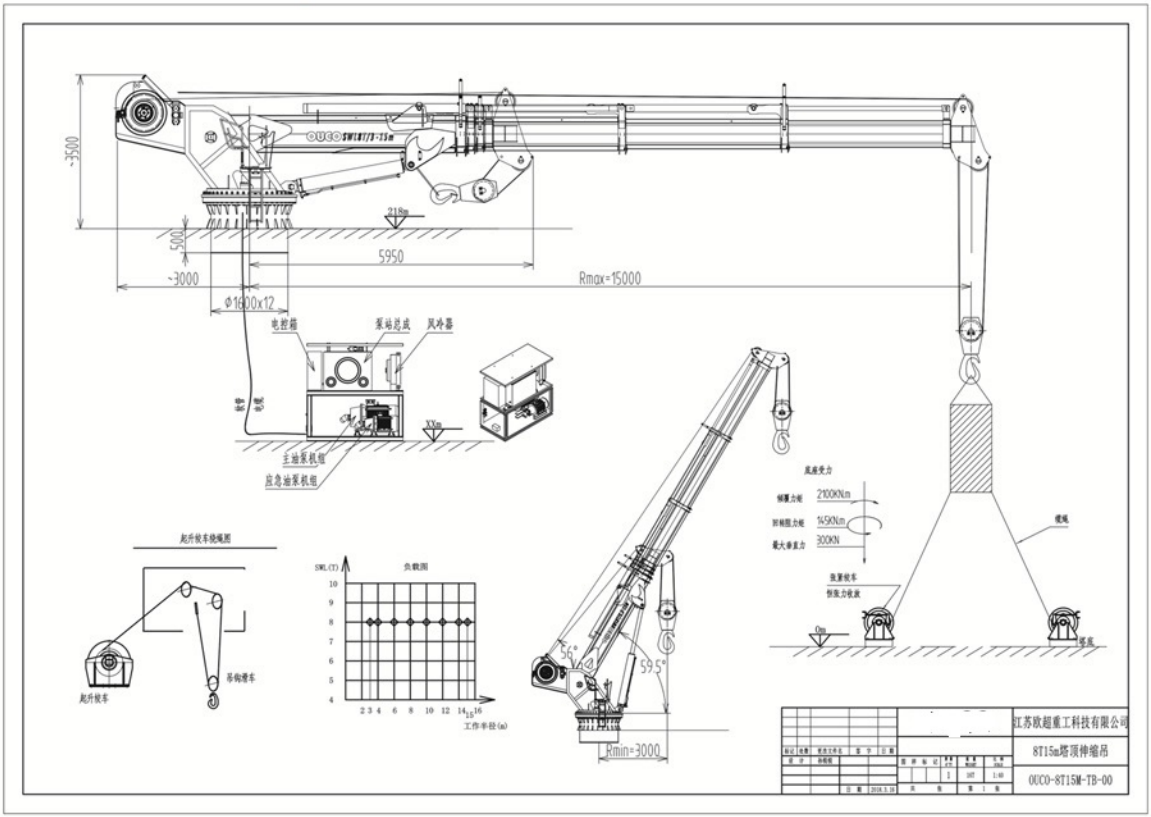

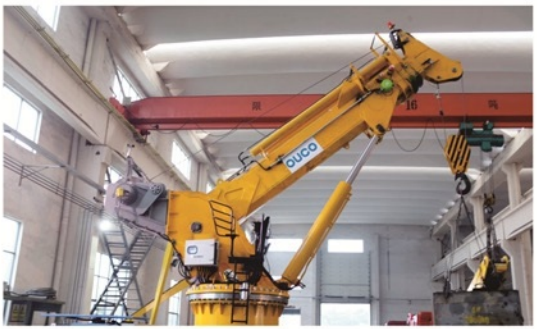

5T13.5M Stiff Boom Crane

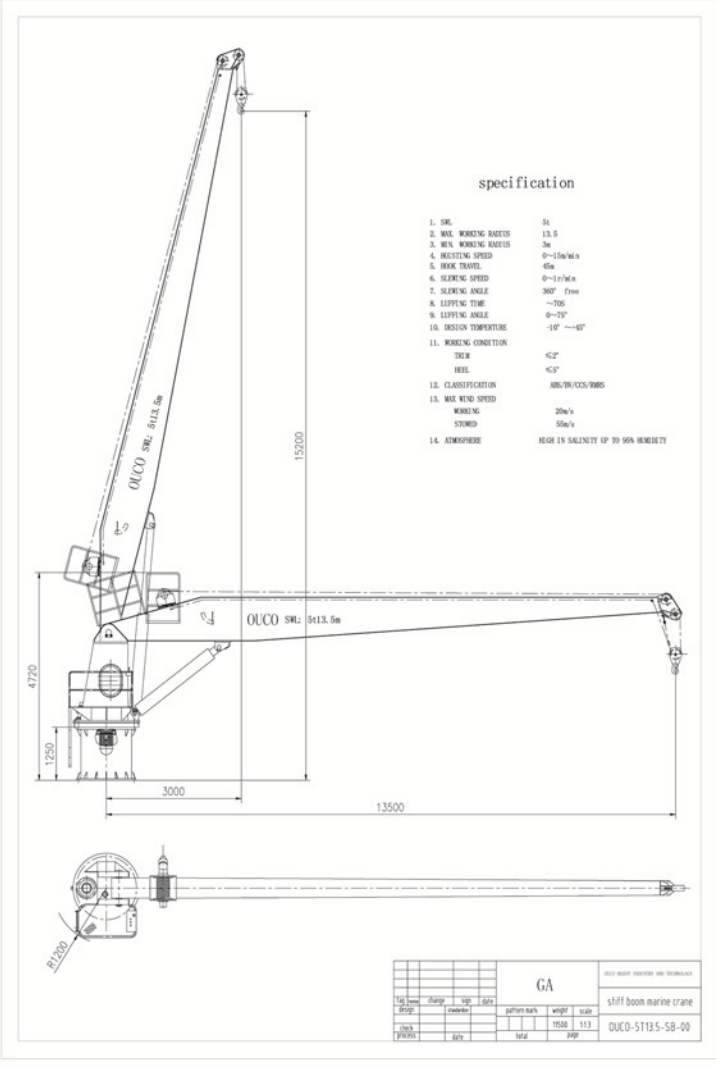

0.98T5M Yacht Crane

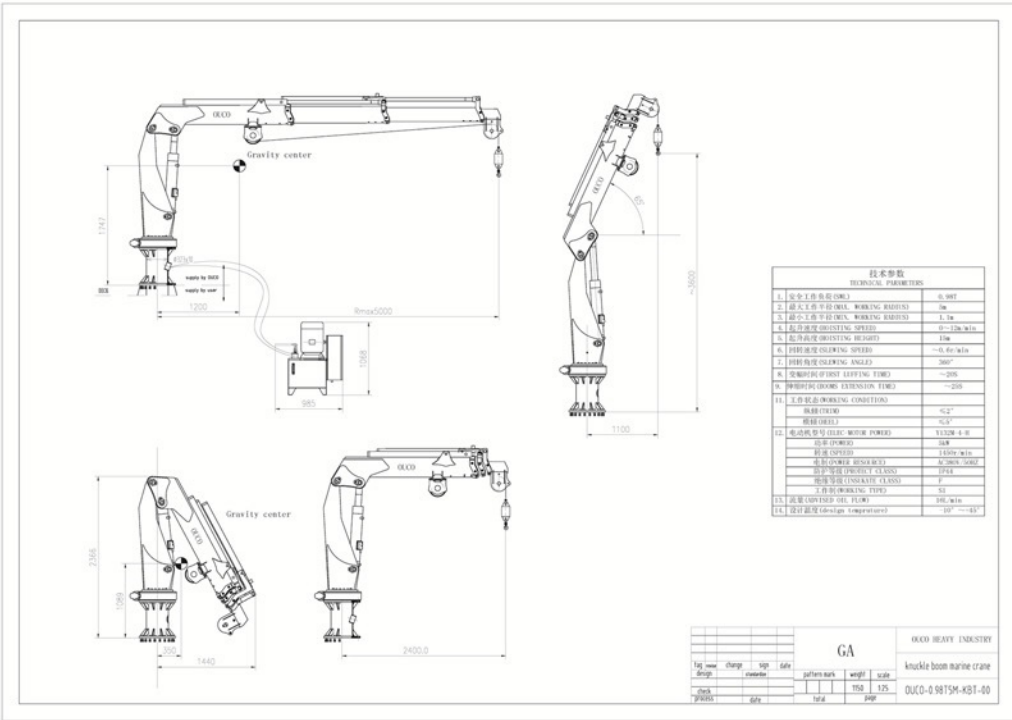

25T26M Cargo Crane

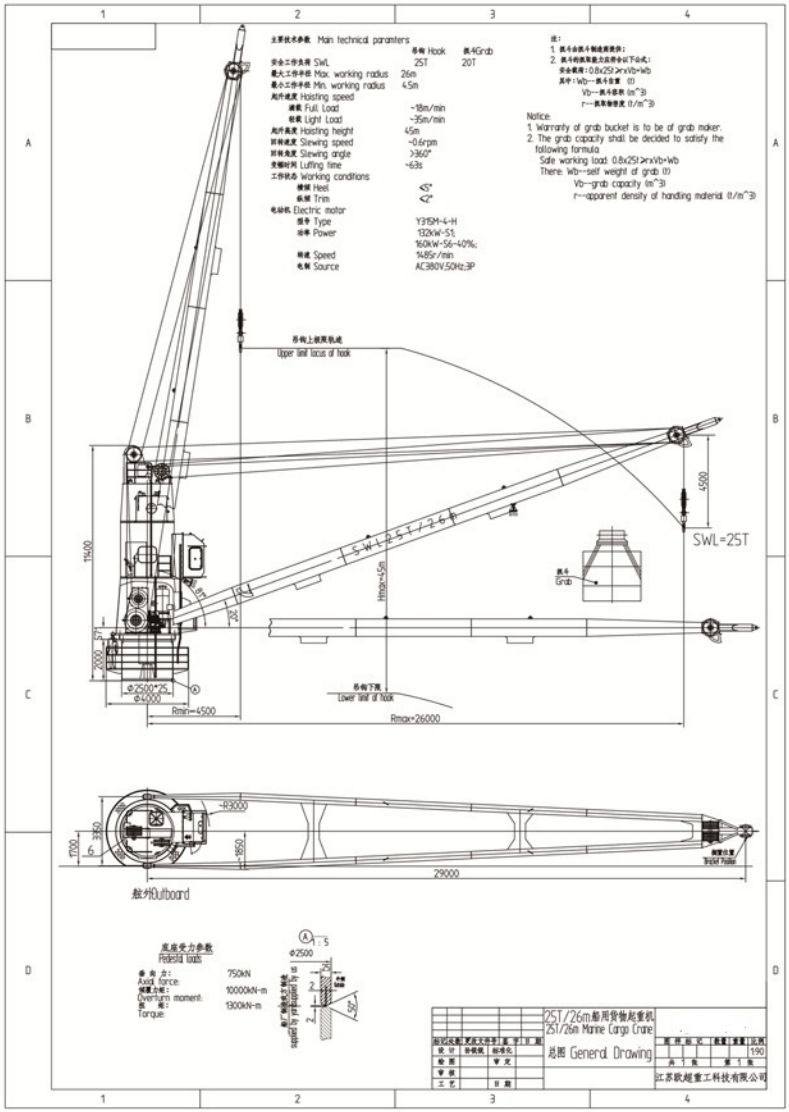

2.5T22M Folding Boom Crane

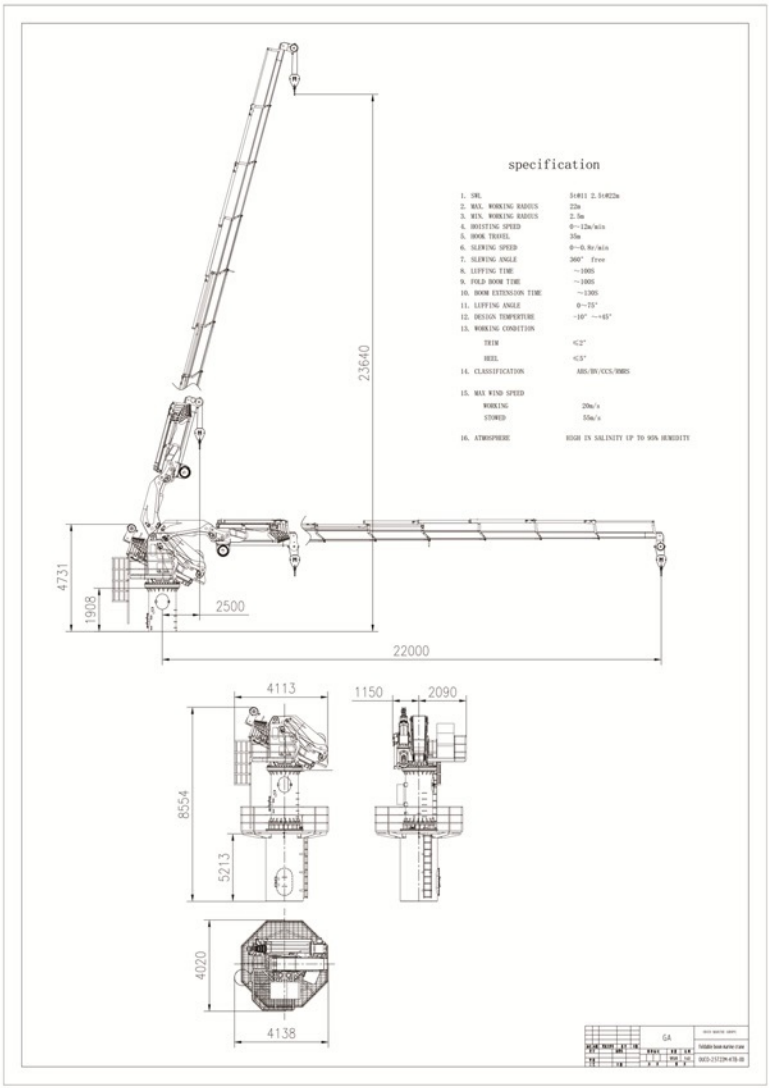

1T30M Knuckle Boom Crane

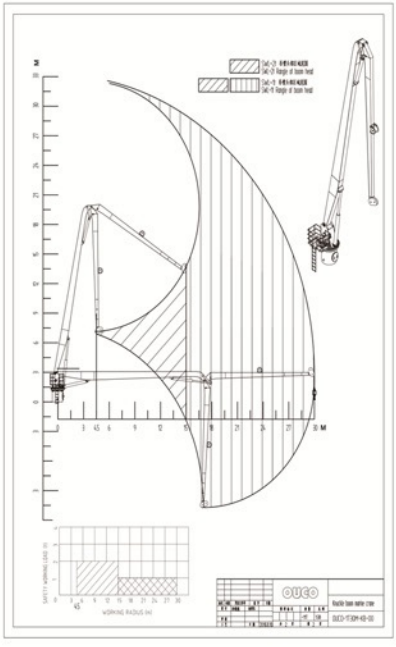

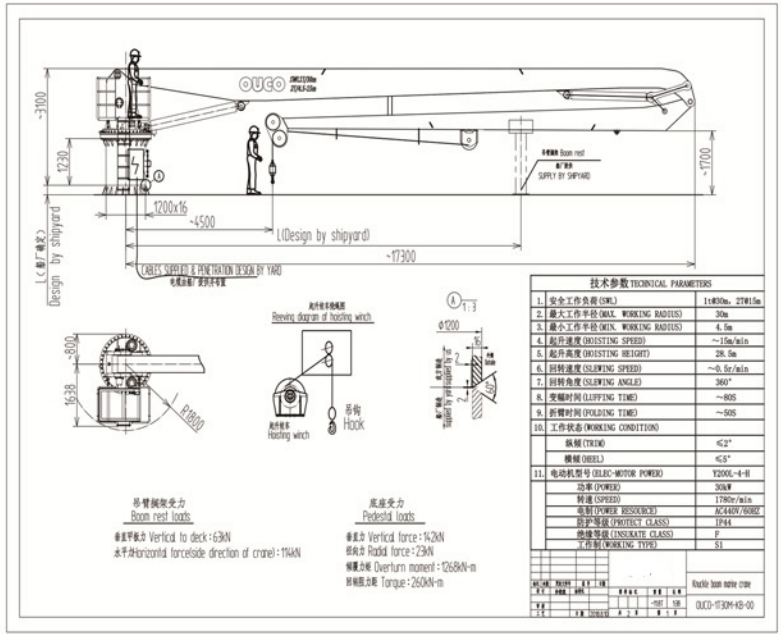

20T30M Electrical Port Crane

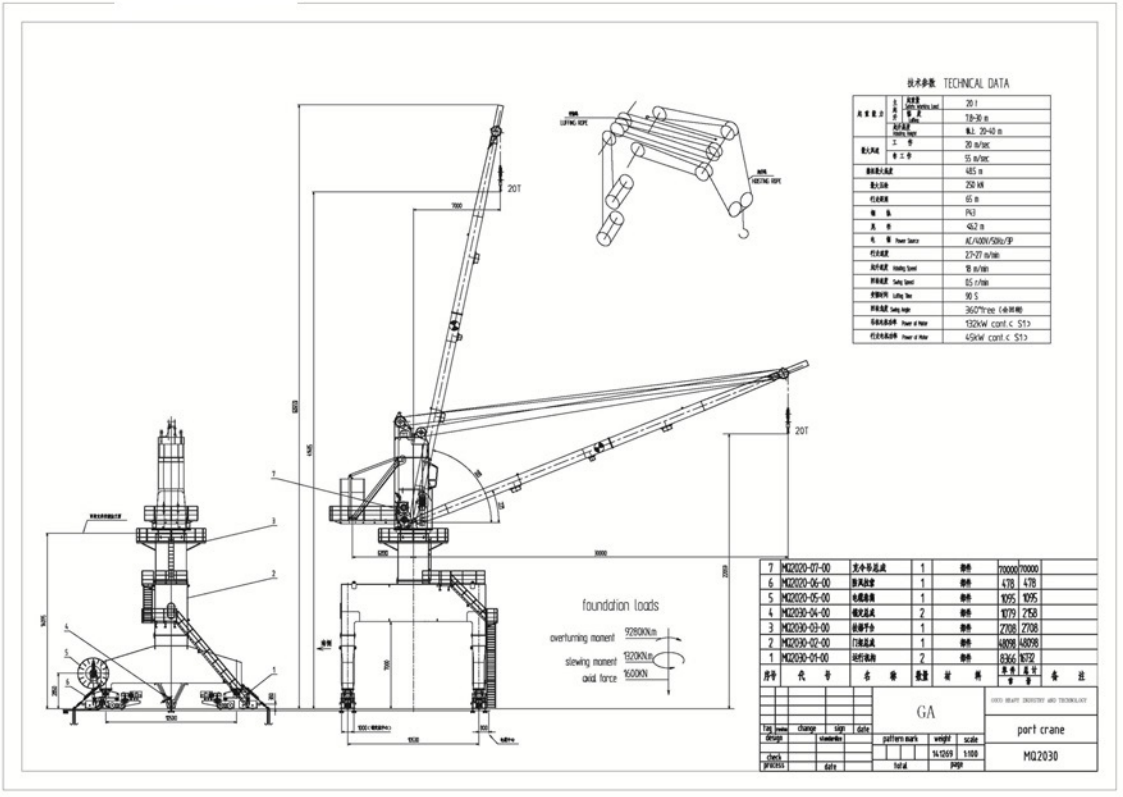

50T37M Port Crane

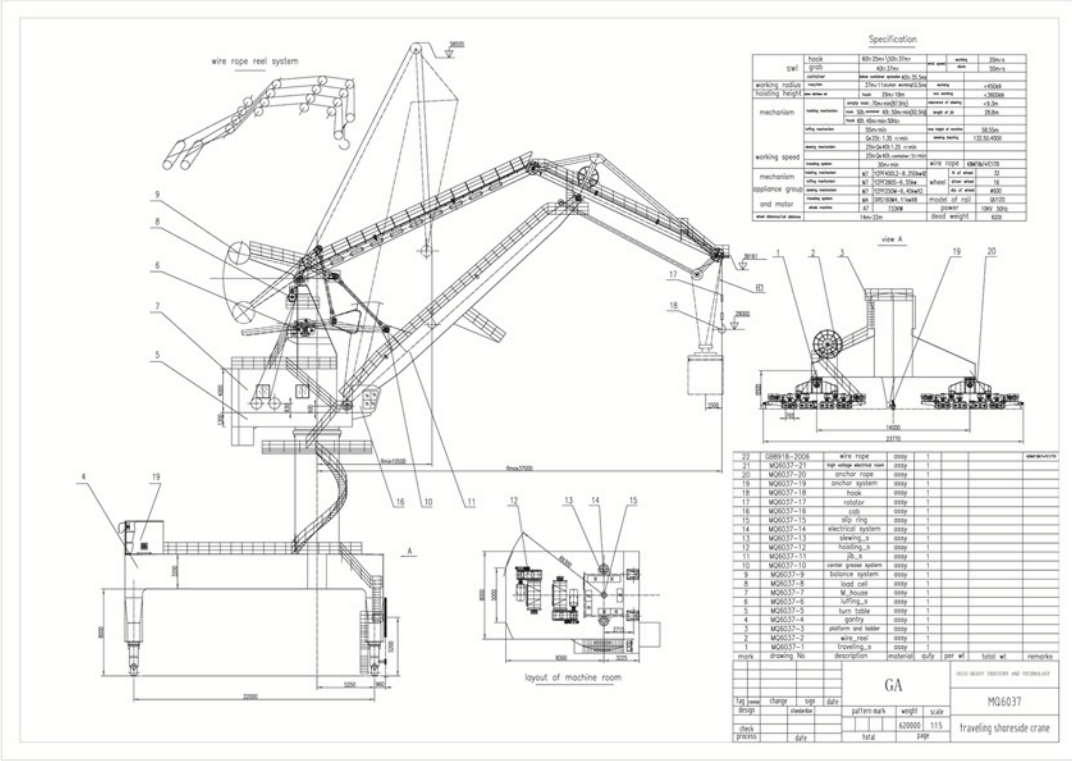

30T15M Mobile Harbor Crane

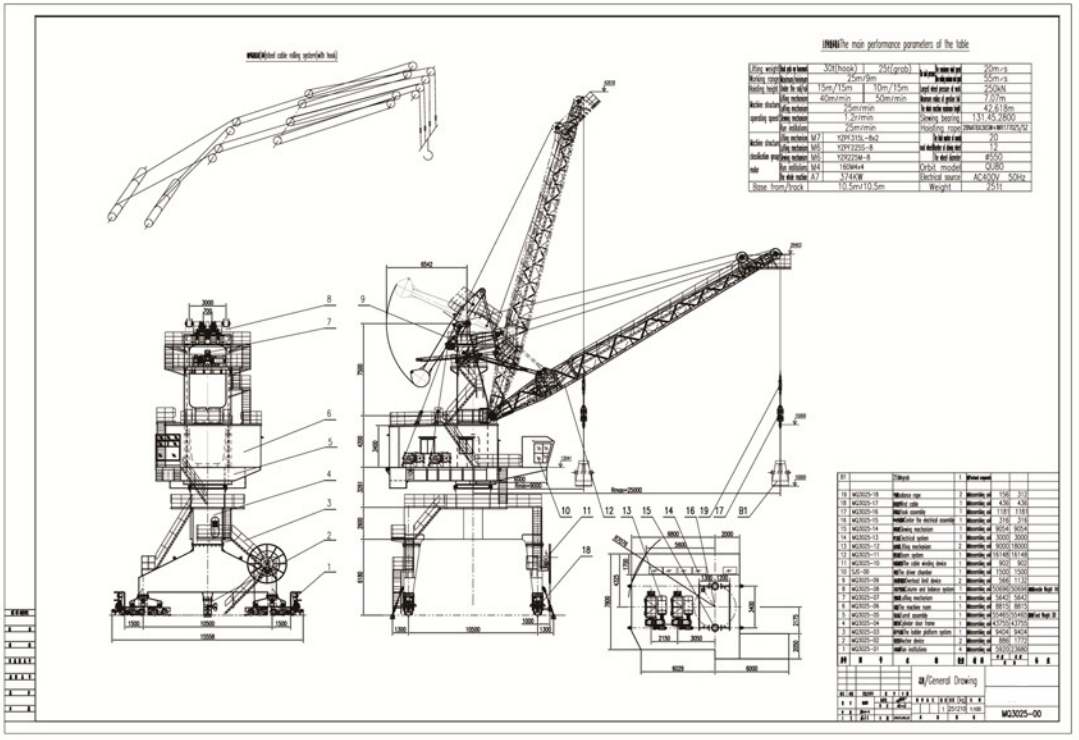

OUCO MACHINERY

1000T Ship Loader

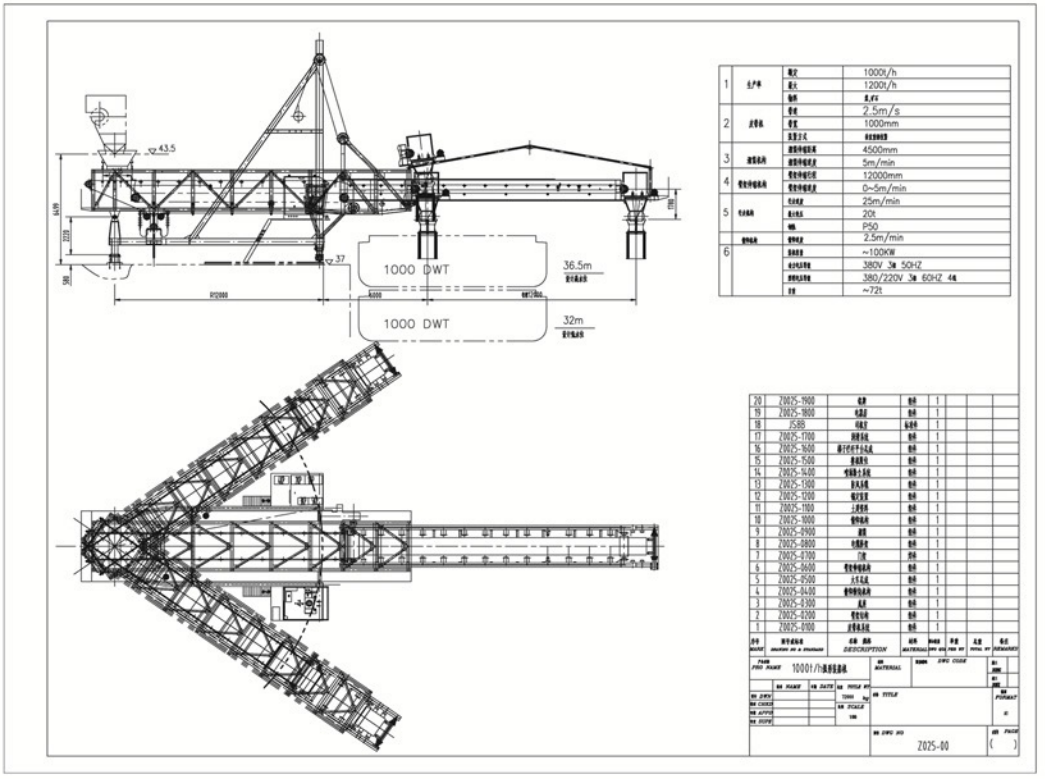

3T20M Stationary Material Handler

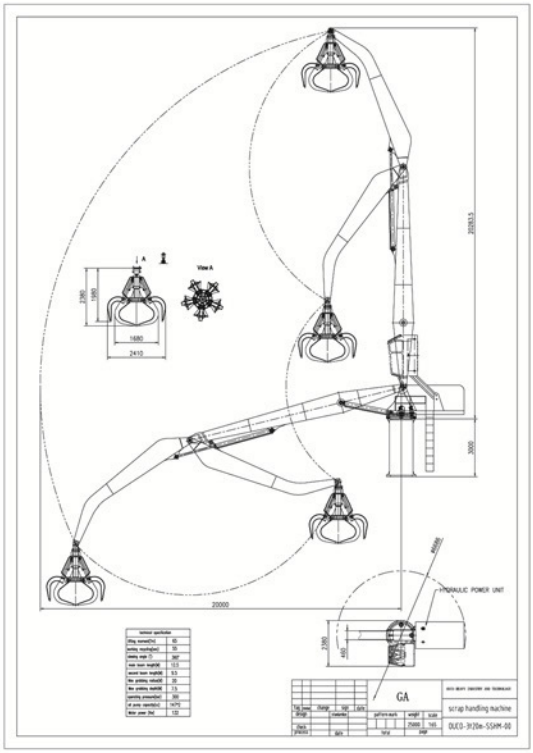

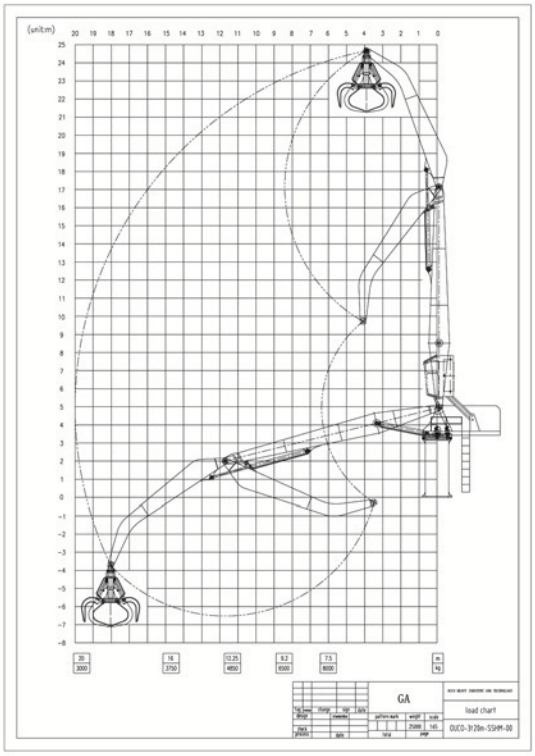

2.6T18M Material Handler

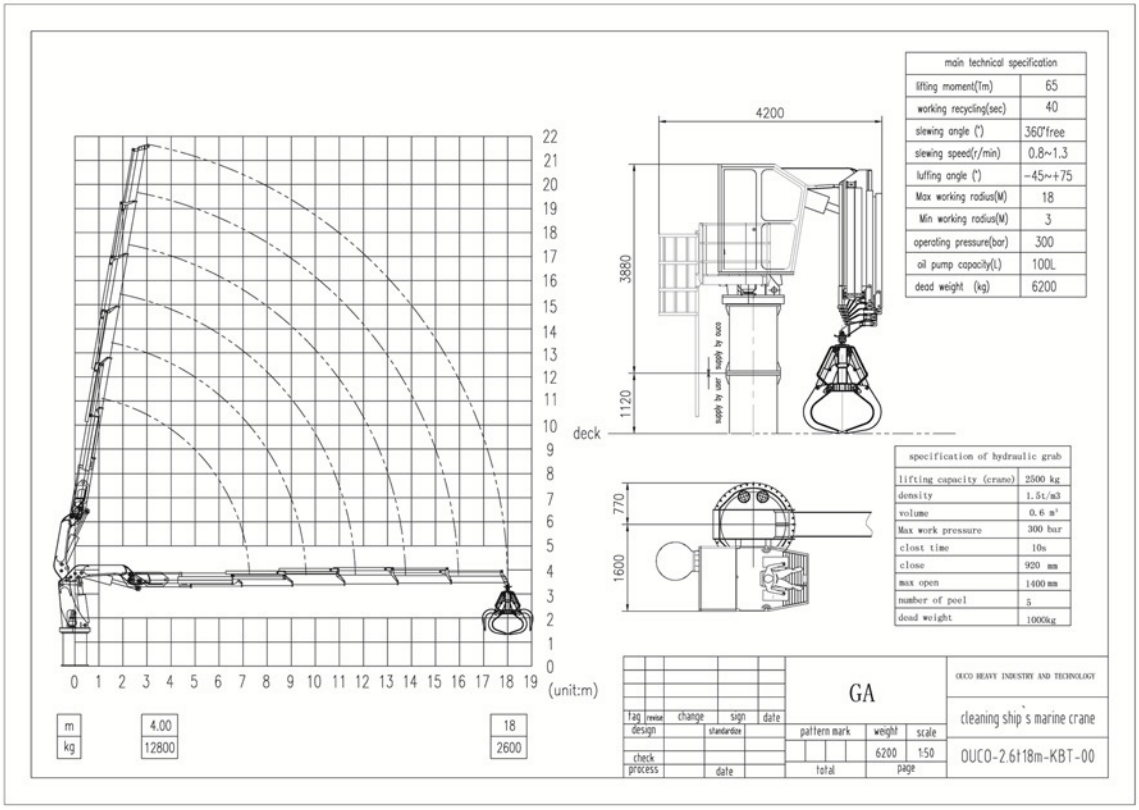

Cargo Mounting Crane

Folding Boom Truck Crane

Model	Max.Lifting Monent(T.M)	Max.Lifting Capacity(kg/m)	Max.Working Radius(m)	Max.Lifting Height(m)	Dead Weight(kg)
OUCO-250	20	12500/2	12.46	13.46	4300
OUCO-300	30	15000/2	12.46	13.46	4500
OUCO-360	36	18000/2	12.46	13.46	4700
OUCO-430	43	20000/2	15.1	16.1	5900
OUCO-500	50	25000/2	16.1	17.1	6100
OUCO-600	60	30000/2	16.1	17.1	6450
OUCO-700	70	35000/2	16.1	17.1	6750

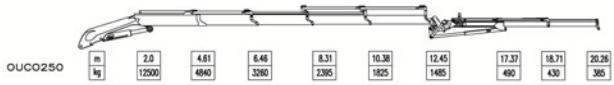

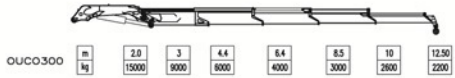

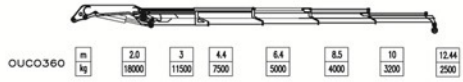

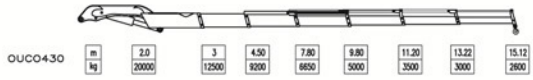

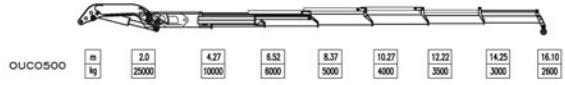

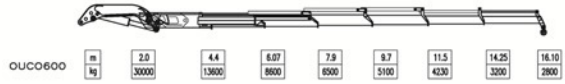

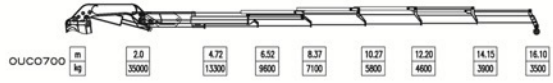

Cargo Mounting Crane

Semi–Knuckle Boom Truck Crane

Model	Max.Lifting Monent(T.M)	Max.Lifting Capacity(kg/m)	Max.Working Radius(m)	Max.Lifting Height(m)	Dead Weight(kg)
OUCO-1400-4	120	30000/4.5	11	14	11500
OUCO-2400-6	240	60000/4.5	13.83	17.2	20000
OUCO-3600-6	360	80000/4.5	13.83	17.2	24000
OUCO-5000-6	500	120000/4.5	13.83	21	26000
OUCO-6000-6	600	140000/4.5	13.83	14.5	55000

OUCO 1400-4

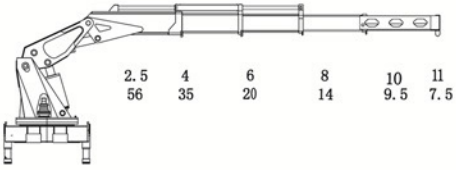

OUCO 2400-6

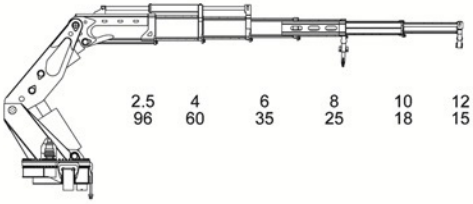

OUCO 3600-6

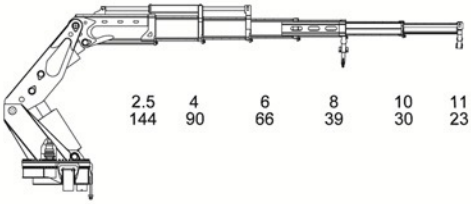

OUCO 5000-6

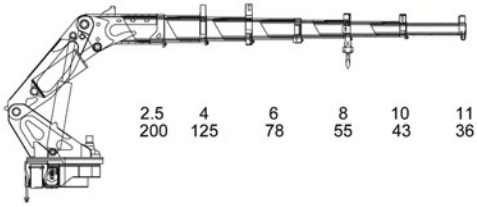

OUCO 6000-6

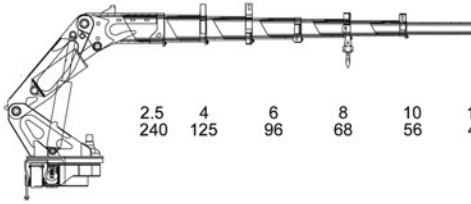

Cargo Mounting Crane

Telescopic Boom Truck Crane

Model	Max.Lifting Monent(T.M)	Max.Lifting Capacity(kg/m)	Max.Working Radius(m)	Max.Lifting Height(m)	Dead Weight(kg)
OUCO-SQ3Z	8	3200	8.1	9.1	1150
OUCO-SQ4Z	10	4000	9.8	10.8	1220
OUCO-SQ5Z	12.5	5000	11.6	12.6	1900
OUCO-SQ6Z	15	6000	11.6	12.6	2100
OUCO-SQ8Z	20	8000	12.8	13.8	3500
OUCO-SQ10Z	25	10000	12.8	13.8	4000
OUCO-SQ12Z	30	12000	15.4	16.4	4500

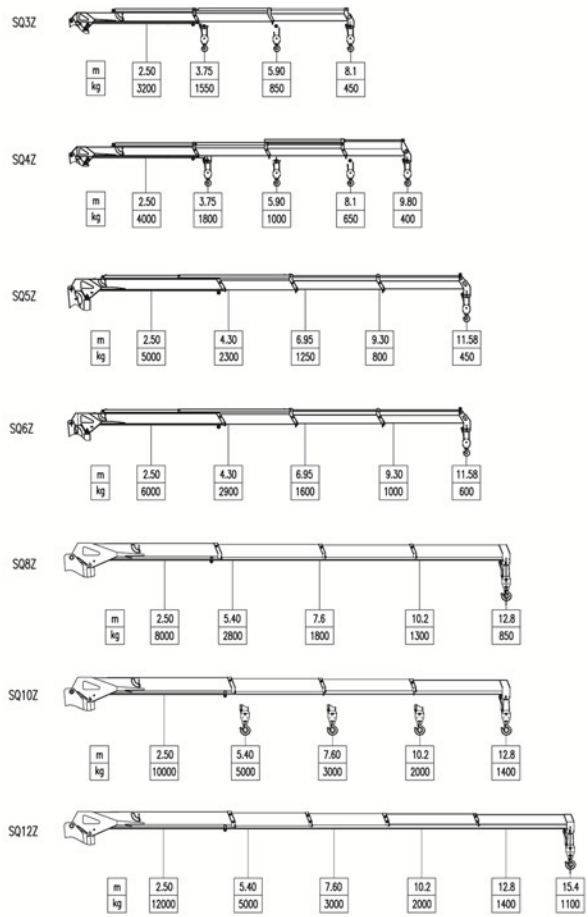

Vessel Seawater Desulfurization System

The chemistry of open loop mode:

Absorption:

$SO_2 + H_2O \rightarrow H^+ + HSO_3^-$ (Ionization)

Neutralization:

$2H^+ + CO_3^{2-} \rightarrow H_2O + CO_2 \uparrow$

Oxidation:

$HSO_3^- + 1/2O_2 \rightarrow HSO_4^-$

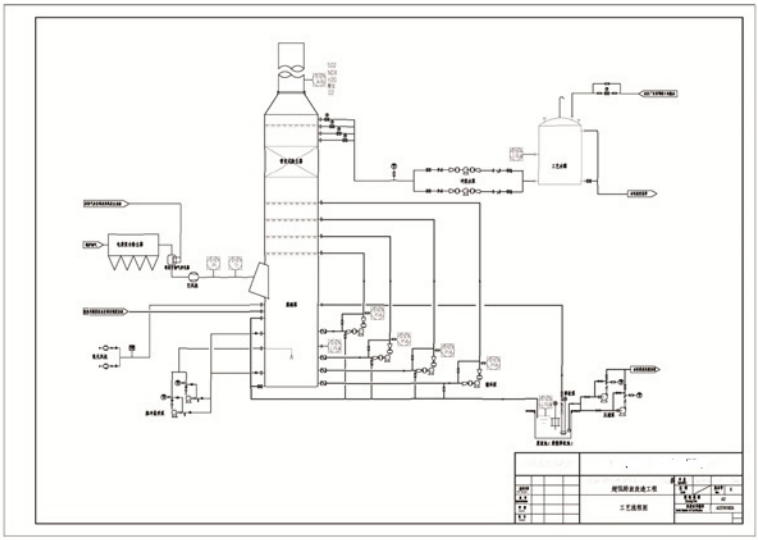

EGCS Type	Unit	DeSOx-30-O/C/H	DeSOx-60-O/C/H	DeSOx-75-O/C/H	DeSOx-90-O/C/H	DeSOx-100-O/C/H	DeSOx-120-O/C/H	DeSOx-160-O/C/H	DeSOx-180-O/C/H	DeSOx-210-O/C/H	DeSOx-300-O/C/H	DeSOx-400-O/C/H	DeSOx-470-O/C/H	DeSOx-550-O/C/H	DeSOx-630-O/C/H	DeSOx-700-O/C/H
Total Engine Power	MW/h	4	8	10	12	13	15	20	23	27	38	50	60	70	80	90
Exhaust Gas Flow	Kg/h	31576	62846	76427	94859	102764	118574	20	181813	213433	300387	395247	474296	553345	632395	711444
Out Diameter	m	2	62846	3.1	3.4	3.6	3.8	4.4	4.7	5.1	6.1	7	7.6	8.2	8.8	9.4
Height Of EGCU	m	14	15	15.5	15.5	15.5	16	16	16	16	17	17	18	19.5	20	20
Weight Of EGCU	T	12.1	15.4	16.7	17.9	18.5	19.6	22	23.3	25	29	32.8	35.6	38.3	40.8	43.2
Max Power Load (for open loop mode)	KW	100	168	202	236	253	287	371	422	490	676	881	1050	1220	1389	1560
Scrubber Efficiency		>98% (Compliance with MARPOL/ MEPC requirements)														
MaxTemp. Inlet	°C	450														
Back Pressure	Pa	<1000														
Run dry (Yes/No)		Yes														

Industrial Desulfurization System

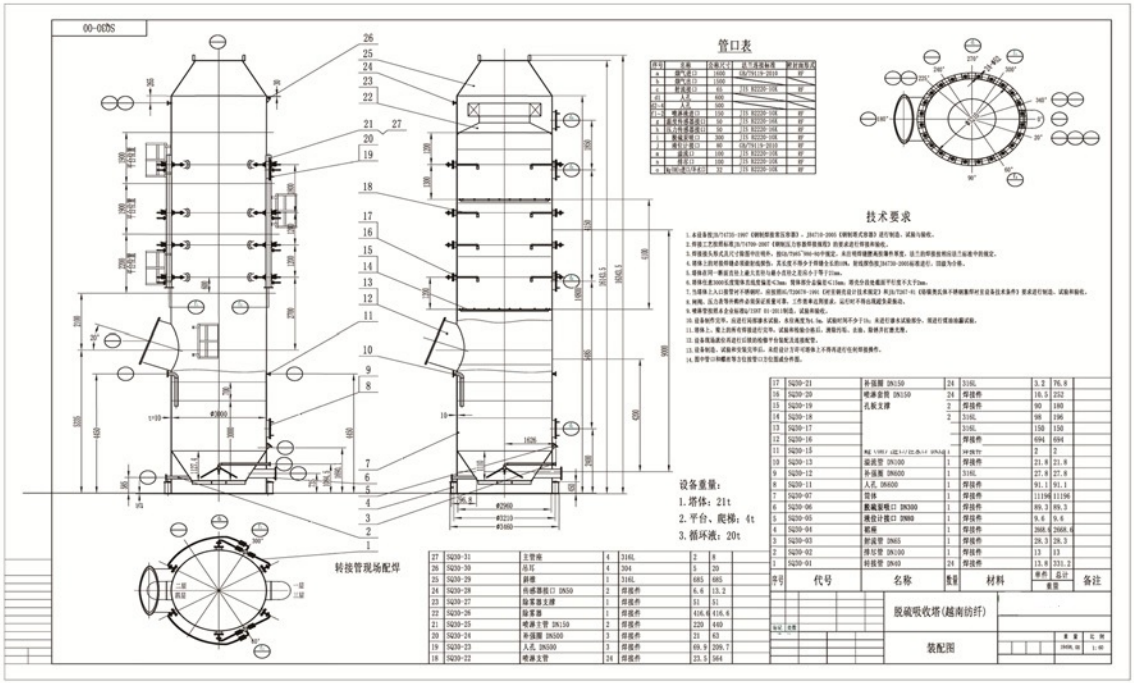

Grab Bucket

Electro-hydraulic
Clamshell Grab

Electro-hydraulic
Peel Grab

Remote Control
Grab

Mechanical Peel
Grab

Mechanical Clamshell
Grab

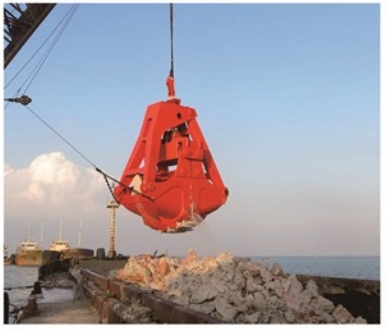

Dredging Grab

Scissor Grab

Wood Grab

Excavator Hydraulic
Peel Grab

Mechanical Clamshell Grab

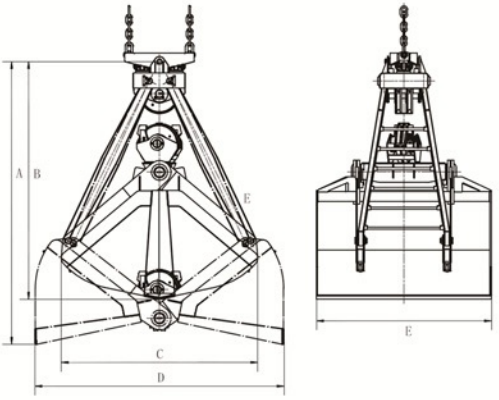

SWL (t)			6.3	8	10	12.5	16	20	25
Dead weight (Kg)	4 times		2300	2800	3440	4500	5600	7360	8800
	5 times rate		2460	2880	3600	4660	5760	7520	9000
Capacity (m3)	4 times		2.5	3.2	4	5	6.5	7.9	10.1
	5 times rate		2.4	3.2	4	4.9	6.4	7.8	10
Pulley	diameter mm		355	400	450	500	560	630	630
Wire Rope	diameter mm		18	20	22	24	26	28	32
	length m	4 times	11.5	12.8	13.8	15	16.5	17.8	18.6
		5 times	14	15.5	16.8	18.5	20.5	21.8	23
	stroke mm	4 times	5940	6600	7100	7680	8520	8920	9760
		5 times	7425	8250	8875	9600	10650	11150	12200
Dimension(mm)	A		3080	3430	3700	4010	4380	4770	4990
	B		2600	2900	3100	3350	3640	4020	4120
	C		2220	2410	2610	2850	3070	3270	3530
	D		2540	2760	2950	3160	3450	3680	3910
	E		1800	1930	2070	2220	2420	2580	2730

Electro–hydraulic Clamshell Grab

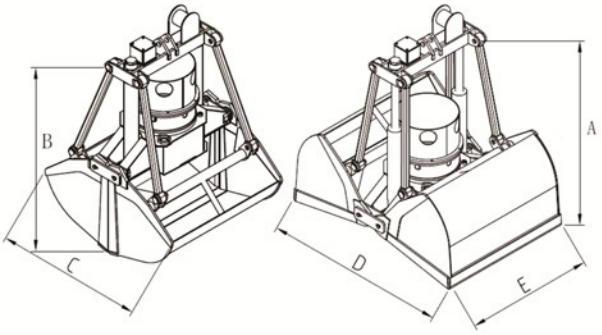

Model	Power		Dead weight	Total lifting weight	Capacity	Maximum Working Pressure	Closing Time		Overall Dimensions(mm)				
	380V 50Hz	440V 60Hz					380V50Hz	440V60Hz	A	B	C	D	E
EH-100	15	18	2870	5.3	3	180	11	9	2650	2440	2020	2750	2300
EH-200			3020	6.3	4	180	13	11	2800	2570	2140	2880	2300
EH-300	18.5	22	3670	7.7	5	180	13	11	2980	2740	2300	3080	2500
EH-400			3980	8.8	6	180	18	15	3100	2780	2470	3260	2500
EH-500	22	26	4720	10.4	7	180	18	15	3190	2880	2540	3340	2700
EH-600			5460	11.9	8	200	18	15	3660	3030	2620	3460	2900
EH-700	30	35	6740	14	9	200	18	15	3660	3260	2760	3710	2940
EH-800			7120	15.2	10	200	18	15	3720	3260	2760	3710	3200
EH-900			7520	16.4	11	200	18	15	3920	3280	2860	3890	3200
EH-1000	37	44	9060	18.7	12	200	19	16	4030	3590	2960	3910	3500
EH-1100			9560	20	13	200	19	16	4090	3620	3050	4010	3500
EH-1200			10060	21.3	14	200	19	16	4190	3640	3120	4180	3500
EH-1300	45	54	11080	23.1	15	220	19	16	4370	3720	3220	4220	3800
EH-1400			11680	24.5	16	220	19	16	4470	4050	3310	4240	3800
EH-1500			12820	27.2	18	220	19	16	4600	4120	3400	4390	4000
EH-1600	55	66	15980	32	20	220	21	19	4850	4190	3480	4670	4000
EH-1700			16860	35.3	23	220	21	19	4850	4430	3590	4860	4150
EH-1800			17780	37.8	25	220	21	19	4850	4430	3590	4830	4500

Wireless Remote Control Grab

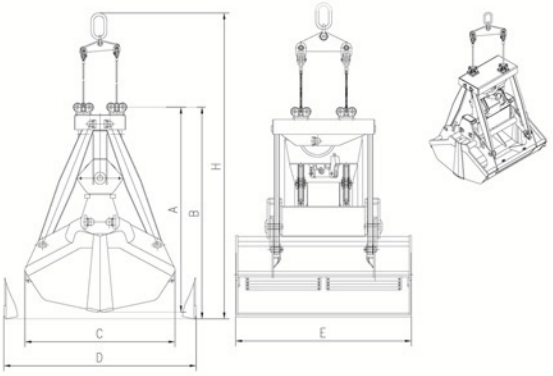

Model	Total lifting weight	Dead weight	Capacity	Wire Diameter	Pulley	Magnification	Overall Dimensions(mm)				
							A	B	C	D	E
WR-100	10	5000	5	24	520	3	3635	3398	2430	3159	2450
WR-200			6	28	520	3	3720	3483	2500	3250	2700
WR-300	20	8000	8	28	520	3	4008	3796	2600	3605	3000
WR-400			9	36	650	3	4159	3960	3000	3753	3200
WR-500	40	15000	10	40	810	3	4596	4305	3300	3805	3200
WR-600			3.3-5.0	24	520	3	3635	3398	2430	3159	2450
WR-700	16	7000	5.0-8.0	28	520	3	4008	3796	2600	3605	3000
WR-800			6.0-10.0	28	520	3	4325	4268	2877	3957	3000
WR-900			6.0-12.0	36	650	3	4110	3972	3030	3866	3500
WR-1000	28	10500	8.0-14.0	36	650	3	4110	3972	3030	3866	3800
WR-1100			13.0-20.0	40	810	3	5033	4896	3520	4636	4000

Bag Filter Eco Hopper

- Suitable for discharge by ship mounted or shoreside grab cranes
- Robust design ideally suited to cope with the tough conditions encountered in ports.

Flex–Flap System

This is a simple mechanical system that has angled steel plates and vertically hanging rubber flaps. The system works as follows…

- Product dropped from Grab, passes through a grid by opening or pushing aside the vertical flaps and flowing over the angled plates.
- Once product has passed through, the flaps fall back into their closed position.
- The displaced air volume within the hopper tries to escape, bringing with it dust, but once it reaches the flex-flap system the grid is sealed and so works as a non-return valve

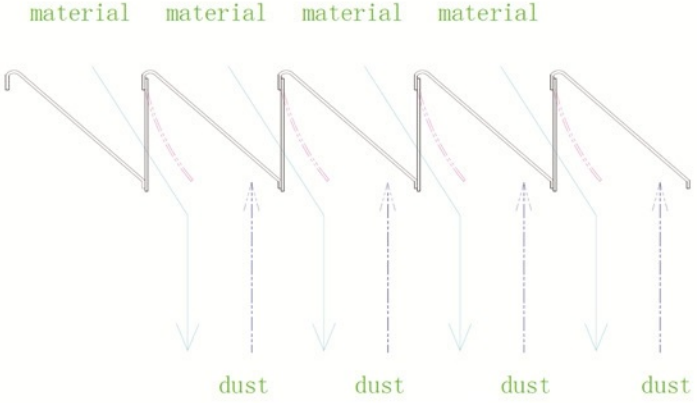

Bag Filter Eco Hopper

Bag Filter Eco Dust Control Hopper is an economical, environmentally friendly dust discharger hopper, suitable for handling a variety of dry bulk materials. Such as gypsum, cement clinker, limestones and so on. Eco dust hopper equipped with a simple and effective dust-proof system to minimize dust flying during grab operating.

We also provide customized engineering solutions that ensure the best performance meets the customer's specific application requirements. For materials that are difficult to handle, such as bauxite, we can offer a unique hopper design. Hopper can be designed to be directly discharged onto the conveyor belt or unloaded to the truck, determined by the customer.

Rail Type Mobile Eco Hopper

Rail mounted installations can be built to suit existing rail systems and the bogie system can be designed to suit the load bearing of the rail in question. The rail width can be suggested to the client if a new installation is being realized.

Self–Propelled Mobile Eco Hopper

Self- Propelled hoppers come with an efficient engine to power the hopper's drive and operation, including dust aspiration filters and other optional features.

Cyclone Eco Hopper

The Cyclone Eco Hopper, a dust controlled grab unloading hopper is an economical and ecologically sensitive solution fulfilling all needs for the efficient import of dry bulk cargoes.

The dust removal mechanism is to make the dust-containing airflow rotate, and the dust particles are separated from the airflow by the centrifugal force and trapped on the wall, and then the dust particles fall into the collecting bag by gravity.

The Cyclone Eco Hopper is specially suitable for bigger size of materials, such as wood pellets, which is a new trend for the power plant to generate electricity as clean energy.

Wheel–mounted with towing system

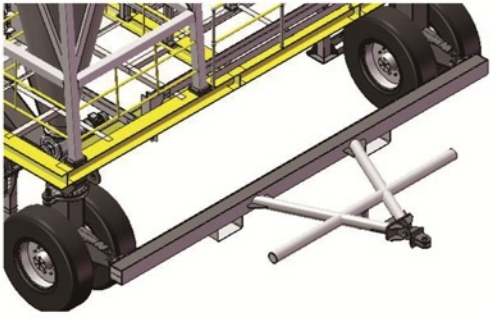

90t Eco Hopper can be mobile by 2t forklift truck with towing system, no extra power needed.

Discharge to truck

By using a dust controlled loading spout the hopper may discharge directly to tipping trucks where material is to be moved directly of the port to a remote location.

Discharge to Conveyor

Shipping the Whole Set of Eco Hopper to the Vessel

Marine Capstan Winch

offers capstans with both electric and hydraulic drive, featuring a space-saving design for onboard installation. Our marine anchor capstan winches serve the same purpose and functions as windlass winches, but with the chain wheel mounted on a vertical axis, allowing for horizontal rope wrapping.

Our electric marine capstans consist of a warping head, clutch part, chain wheel, band brake, reducer, and electric motor. We offer the choice of a local control stand or a remote control panel for convenient operation.

Launch and Recovery System

launch and recovery systems (LARS) are designed to withstand harsh environments, expand the operational possibilities for remotely-operated vehicles, and optimize the deployment of research equipment. Our LARS deploy and recover a variety of equipment, including ROVs, CTDs, seabed sampling equipment, and much more, with the ability to operate at depths of up to 4000 meters.

A typical launch and recovery system consists of an A-frame crane with heave-compensation, an umbilical winch, skid tie-down mounting plates, and an optional hydraulic power unit. These machines are capable of lowering or dropping equipment into the water, and lifting it out once the mission is completed.

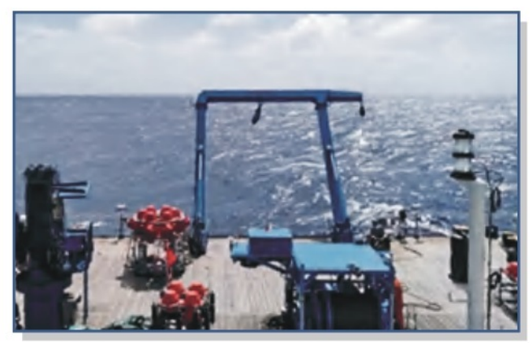

Hydraulic Anchor Winch

marine hydraulic anchor winches, also known as windlasses, provide a simple, efficient solution by combining multiple functions on a single driven main shaft. These hydraulic winches are designed to secure the anchor chain on a boat, enabling the chain or cable to be raised and lowered easily. The winch operates by engaging the links of the chain or cable with a hydraulic notched wheel. Our hydraulic anchor winches come with a range of optional features to suit your needs, such as stainless steel drums, galvanized clovers, greasing systems, and stainless steel protective covers, among others.

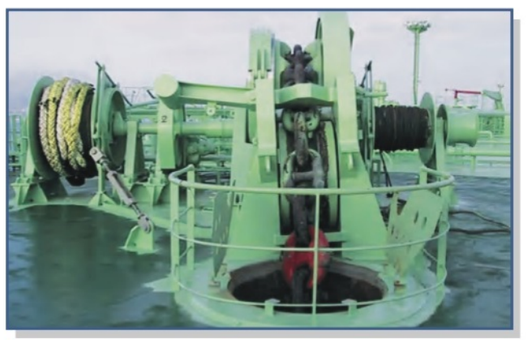

Hydraulic Mooring Winch

mooring winches feature an integrated design that combines a windlass, winch, and capstan for precise handling of mooring lines, anchor chains, and tow ropes. The corrosion-resistant construction ensures longevity and minimal maintenance, making it ideal for offshore operations.
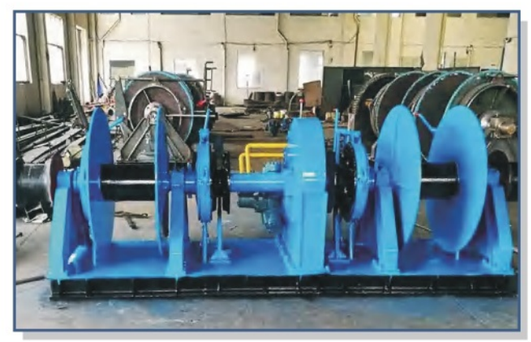
Our hydraulic mooring winches are available in both single-drum and double-drum options, which come in coaxial and waterfall types. To meet the different mooring winches and user needs, we also manufacture right-hand and left-hand versions. We can customize these winches with optional features, such as stainless steel drums, galvanized clovers, and greasing systems.